somfy.com

io homecontrol

Dexxo Pro io

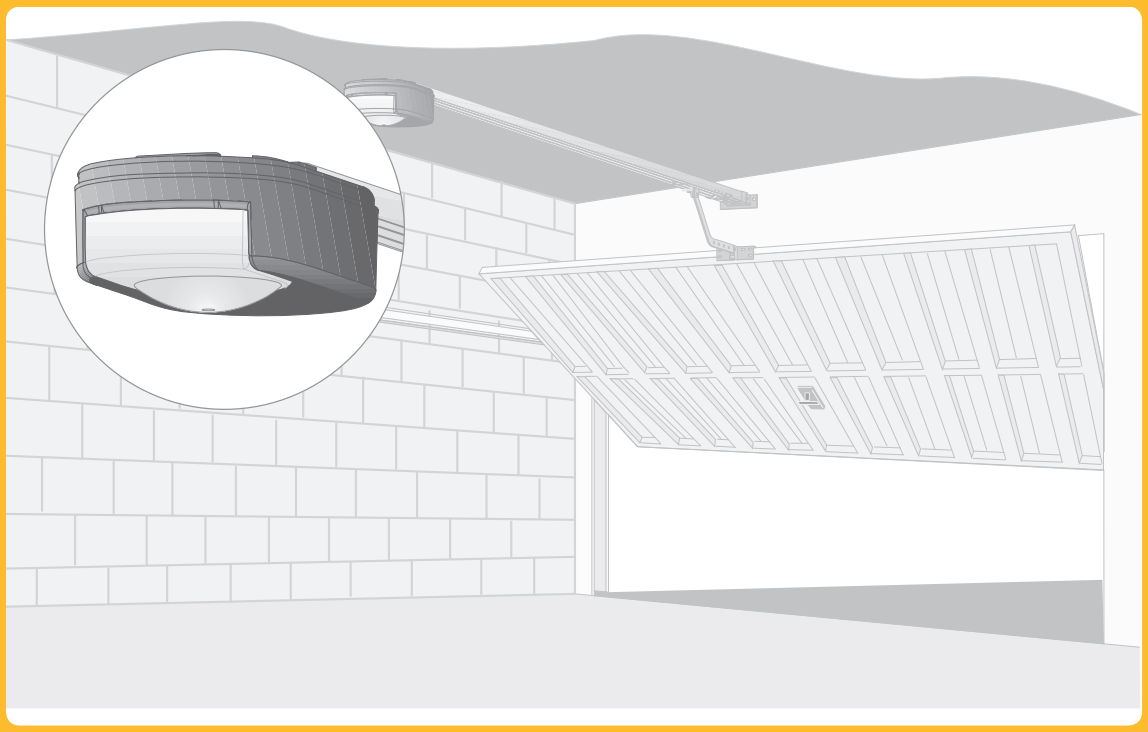

FR Manuel d'installation - Illustrations
DE Gebrauchsanleitung - Abbildungen
IT Manuale d'installazione - Illustrazioni
NL Installatiegids - Illustraties

EN Installation manual - Illustrations
ES Manual de instalación - Ilustraciones
PT Manual de instalação - Ilustrações
EL Εγχειρίδιο εγκατάστασης - Εικόνες

Situo io
Situo io A/M
Situo io mobile

Telis 1 io

Impresario
Chronis io

Telis
Composio io

Keytis io
Keytis Home io

5048361D

HOME MOTION BY somfy

1

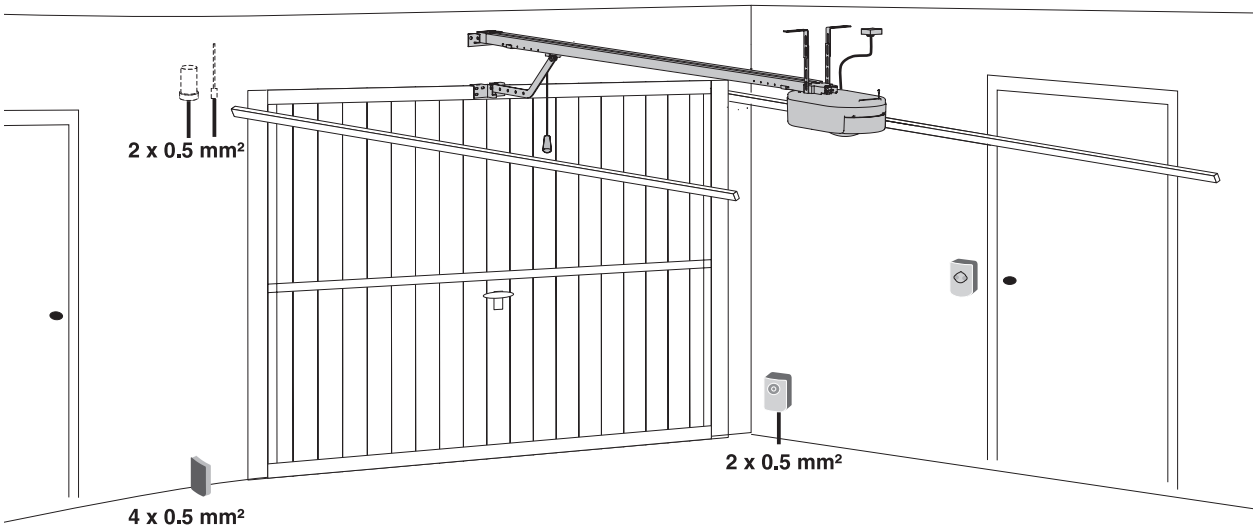
2 x 0.5 mm²
2 x 0.5 mm²
4 x 0.5 mm²

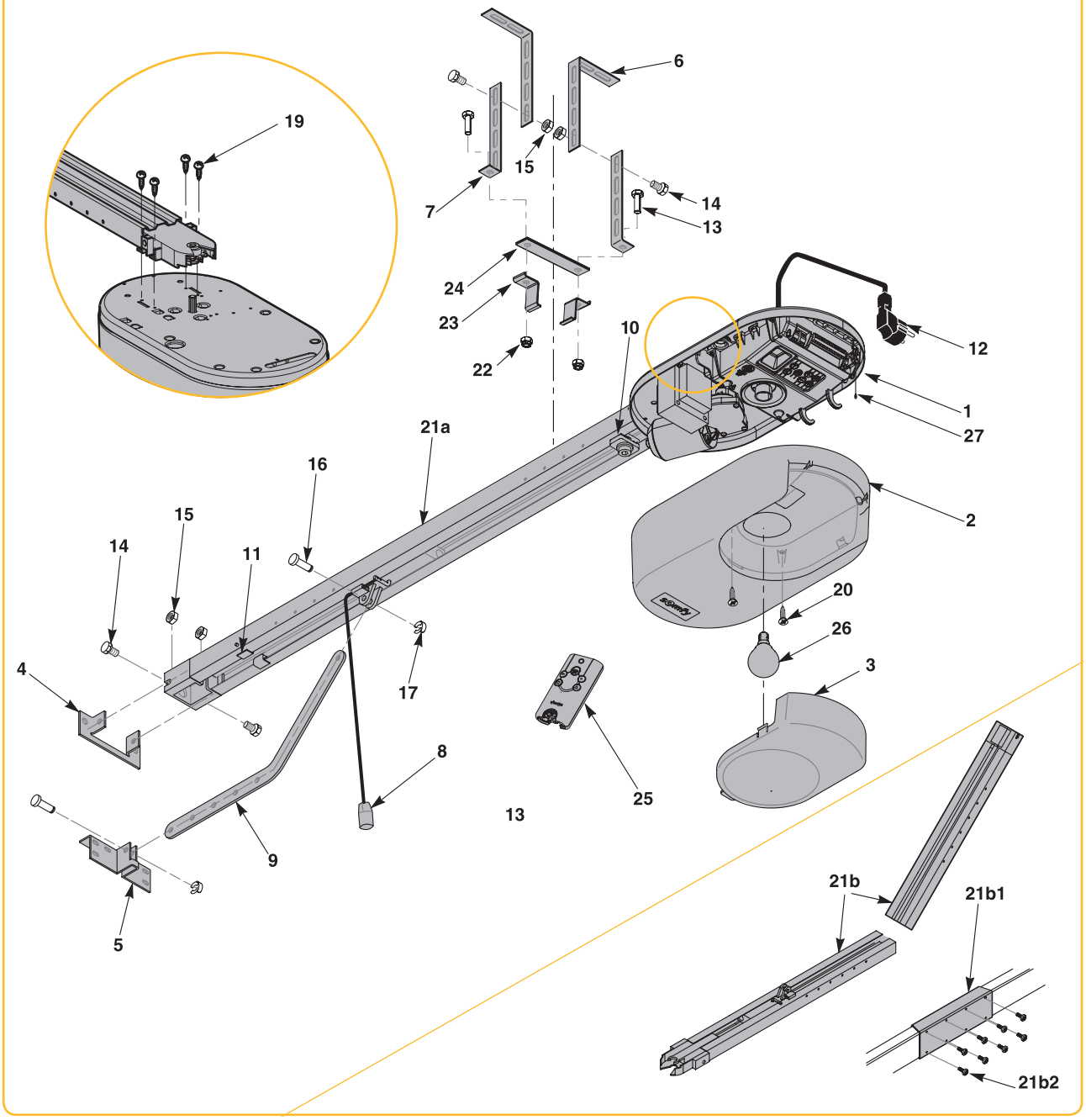
19
6
15
7
14
13
24
23
22
10
12
1
27
21a
16
15
14
11
2
20
26
3
4
17
8
25
13
9
5
21b
21b1
21b2

2

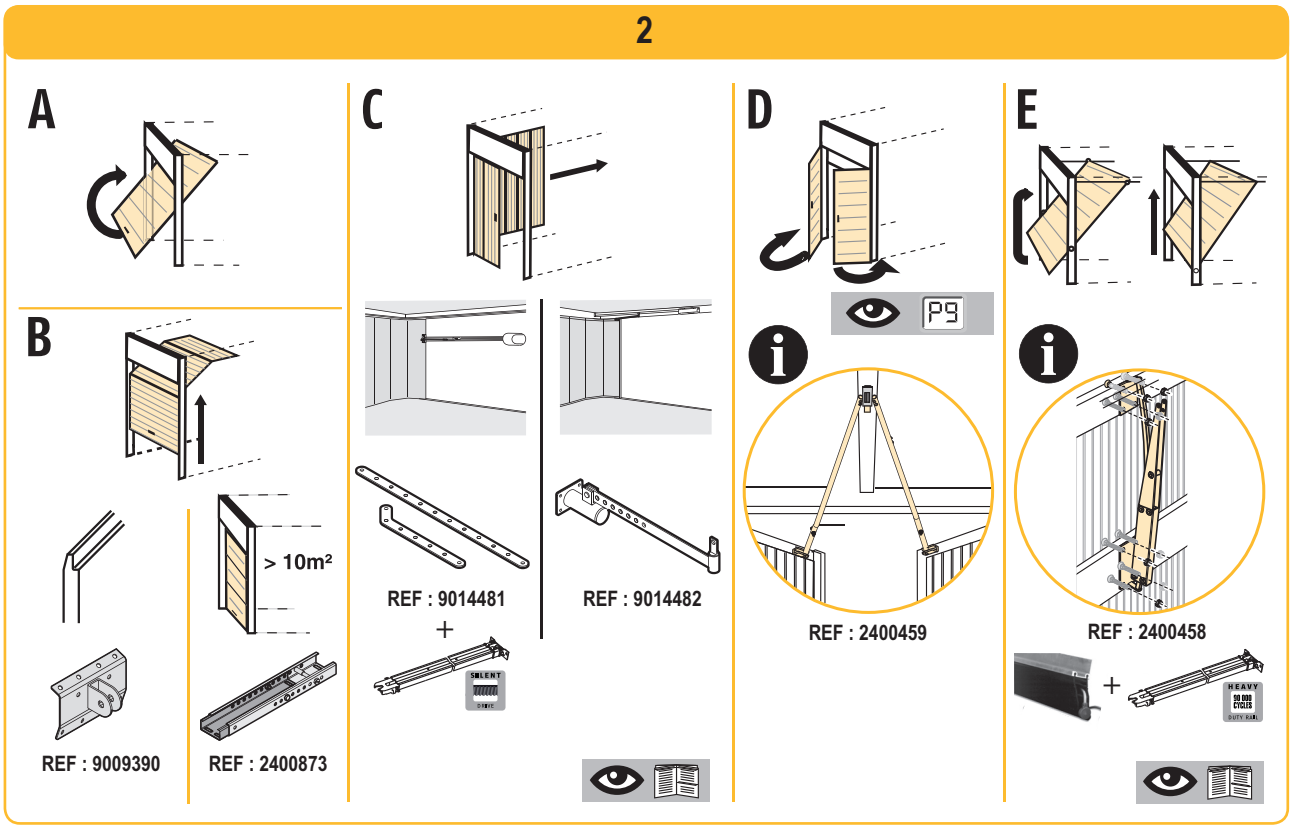
A
B
> 10m²
REF : 9009390
REF : 2400873
C
REF : 9014481
+
REF : 9014482
D
P9
REF : 2400459
E
REF : 2400458
+

3

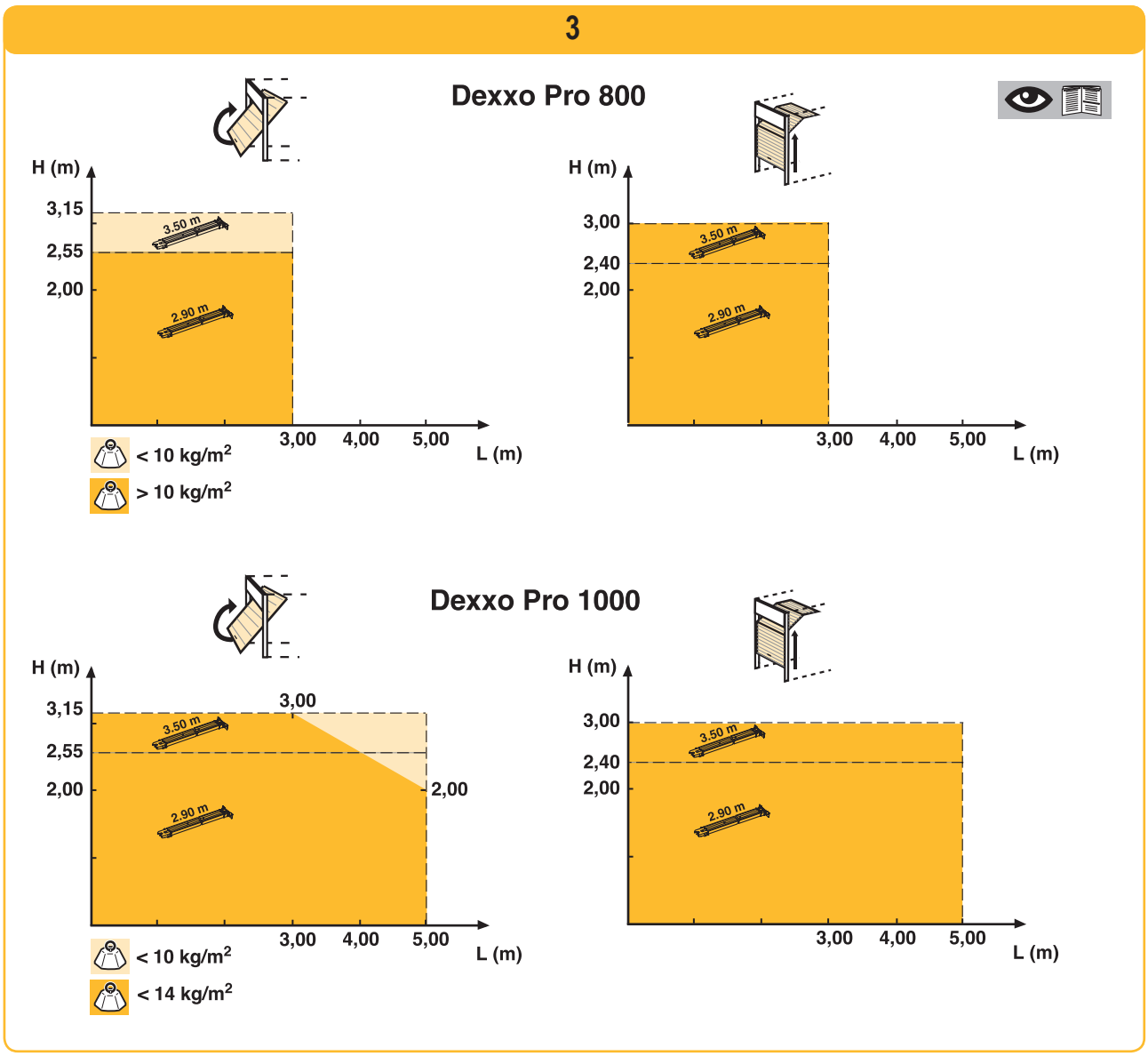
Dexxo Pro 800
H (m)
3,15
2,55
2,00
3.50 m
2.90 m
3,00
4,00
5,00
L (m)
< 10 kg/m²
> 10 kg/m²
H (m)
3,00
2,40
2,00
3.50 m
2.90 m
3,00
4,00
5,00
L (m)
Dexxo Pro 1000
H (m)
3,15
2,55
2,00
3,00
2,00
3.50 m
2.90 m
3,00
4,00
5,00
L (m)
< 10 kg/m²
< 14 kg/m²
H (m)
3,00
2,40
2,00
3.50 m
2.90 m
3,00
4,00
5,00
L (m)

4

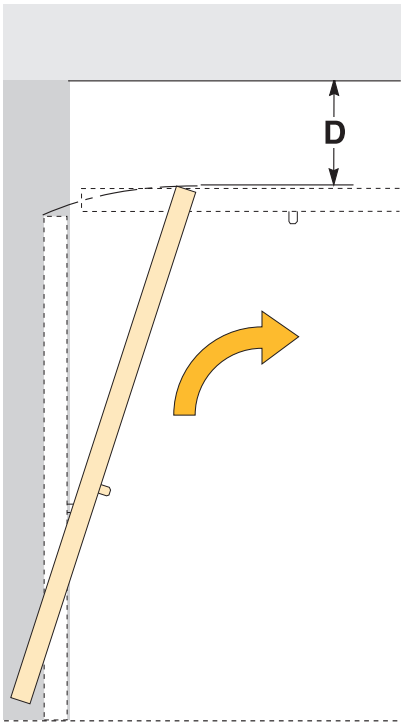

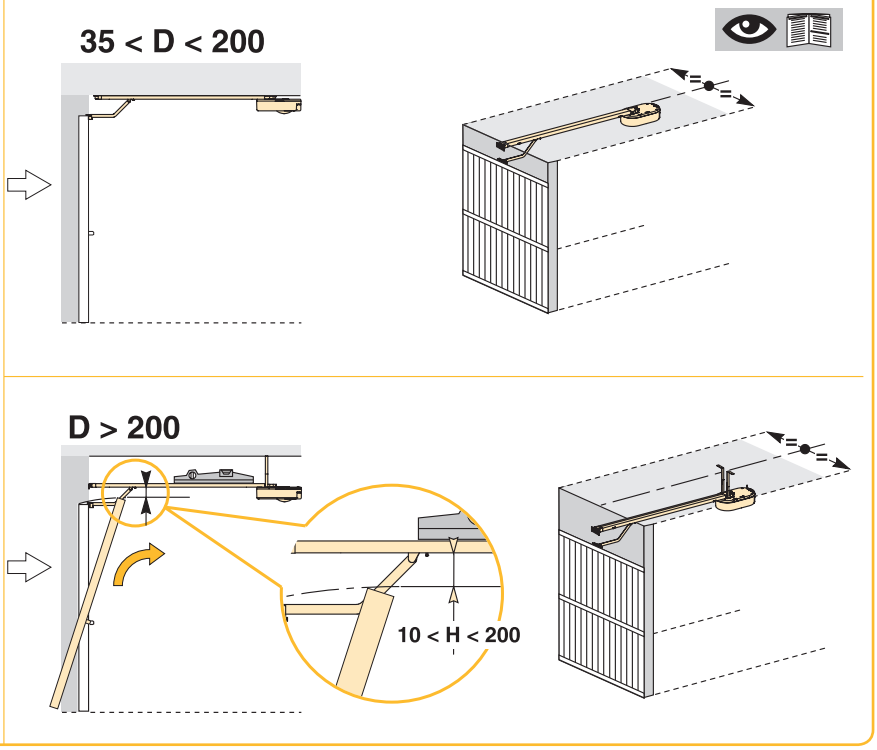

5

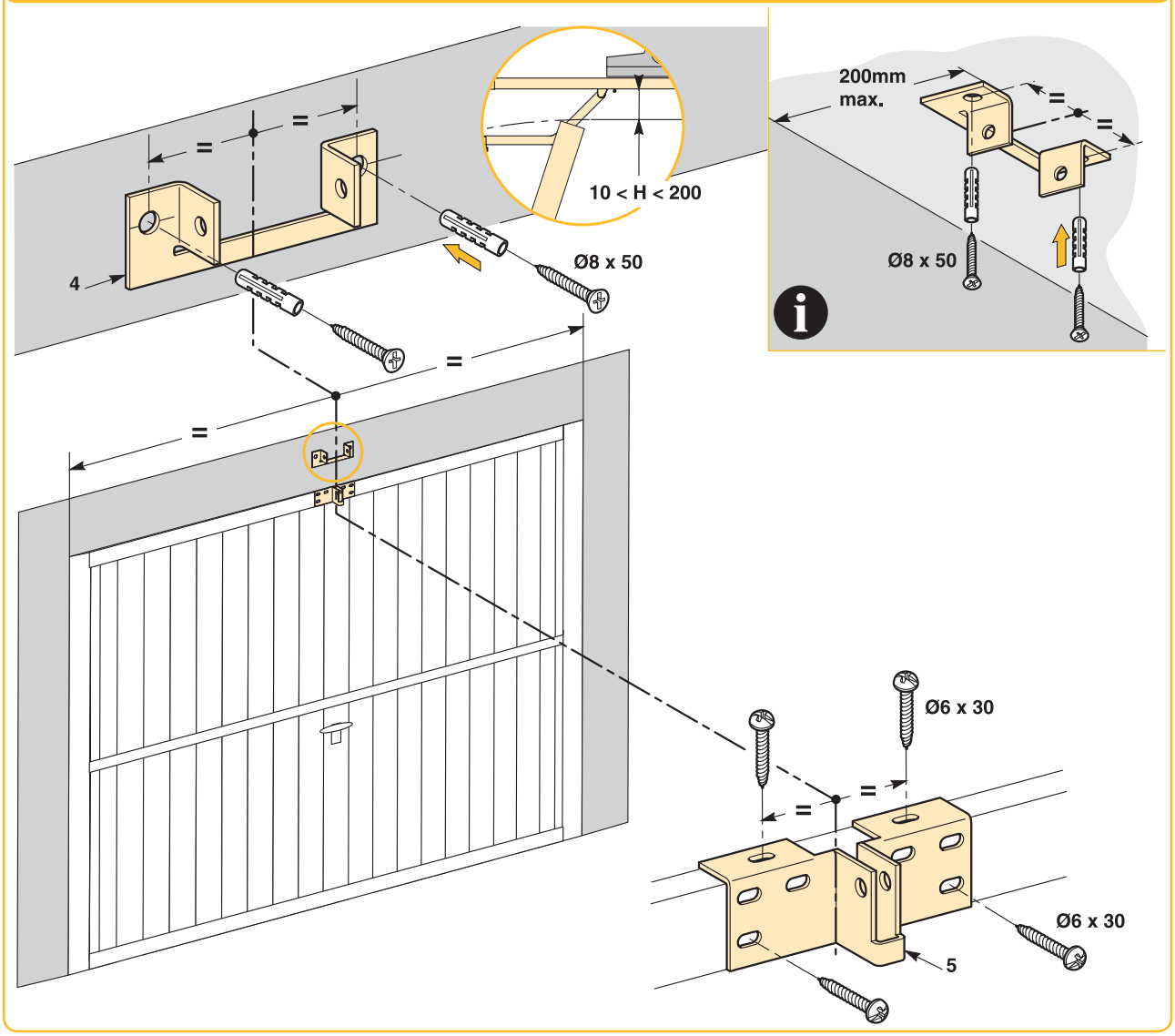

6

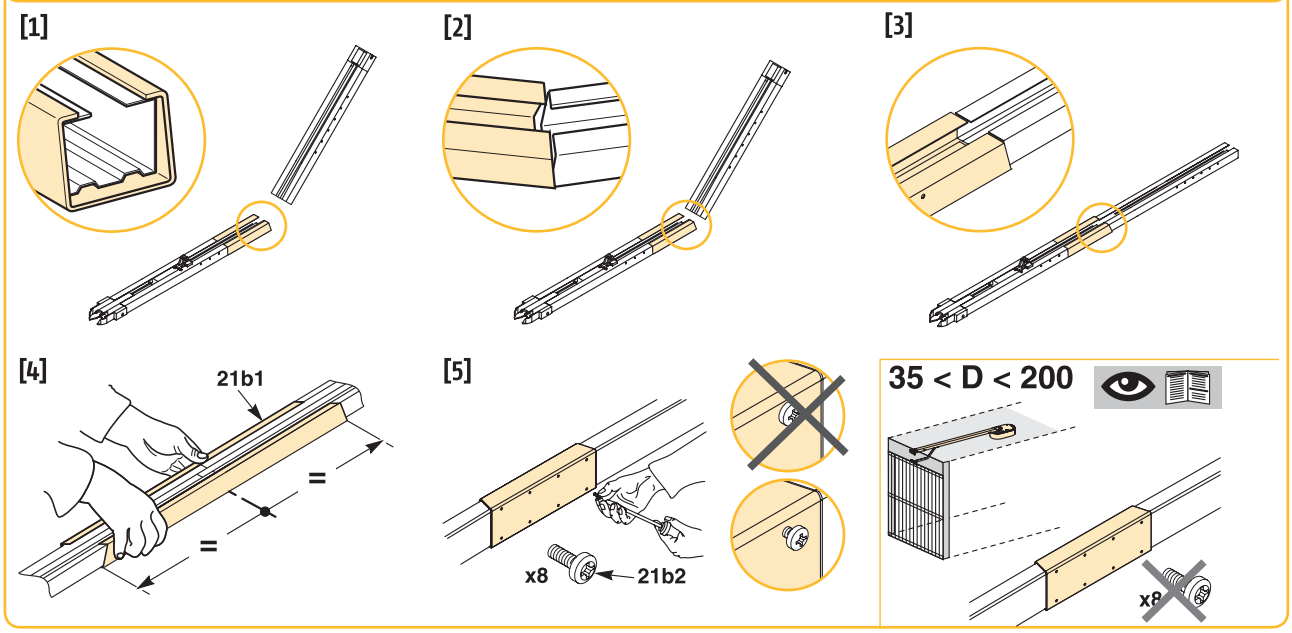

7

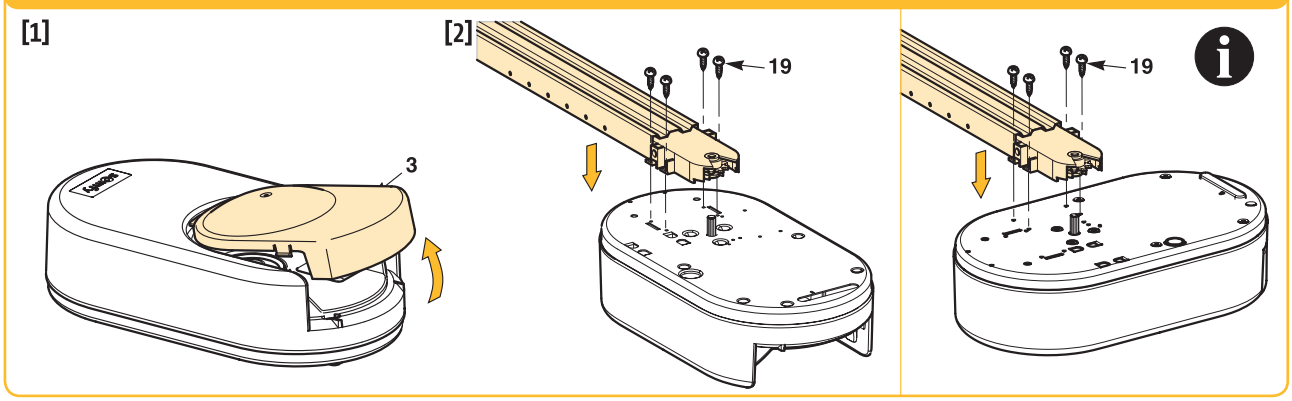

8

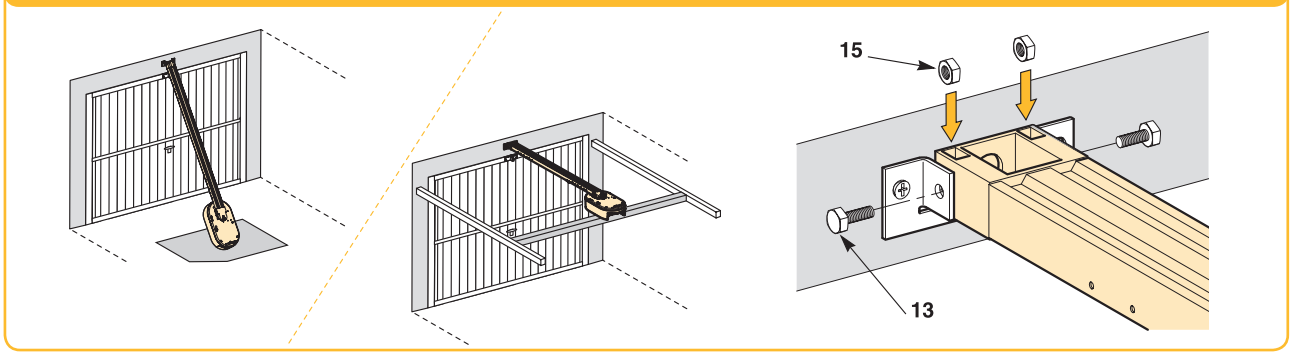

9

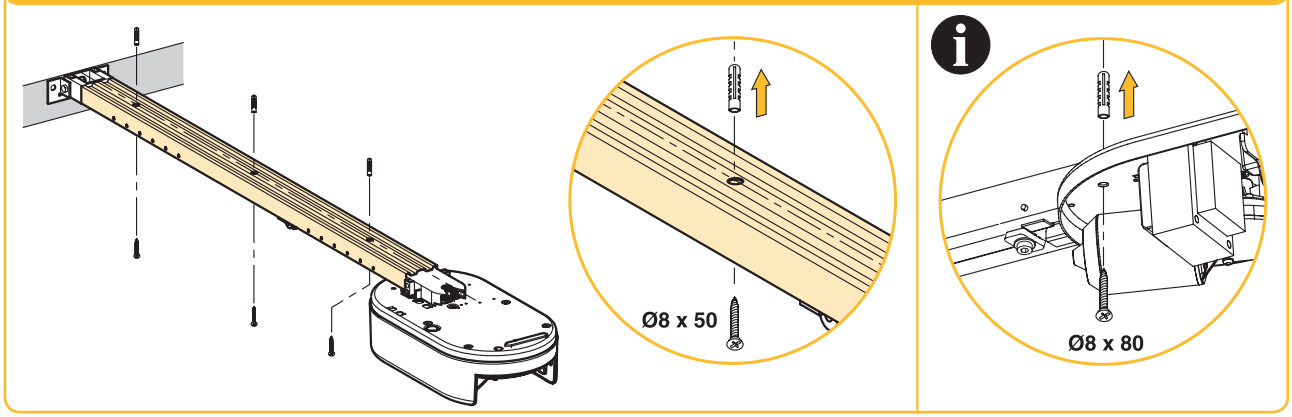

10

a

[1]

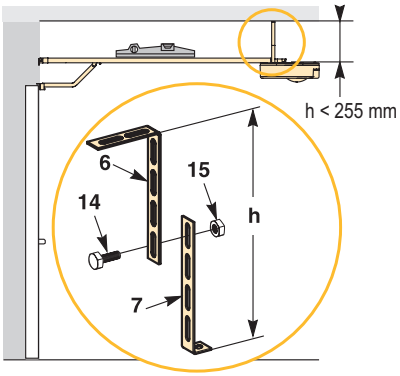

[2]

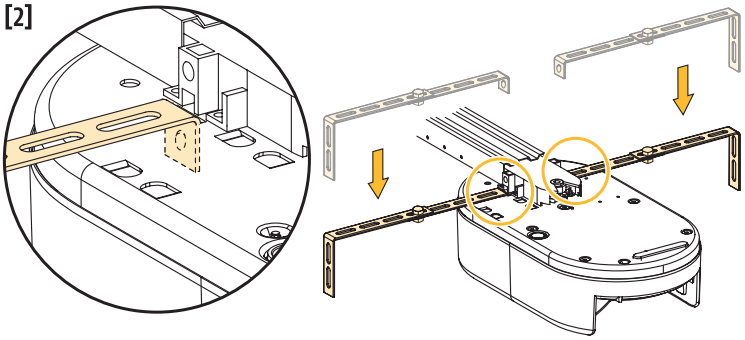

[3]

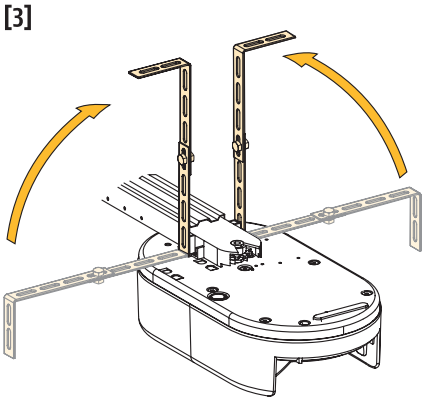

[4]

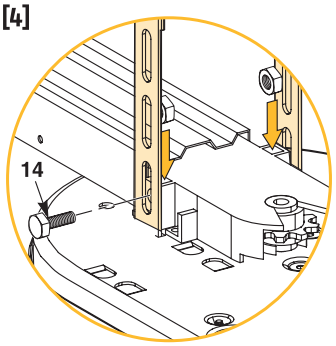

[5]

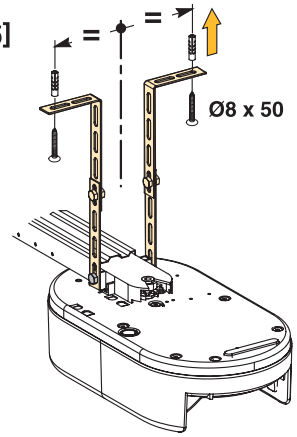

b

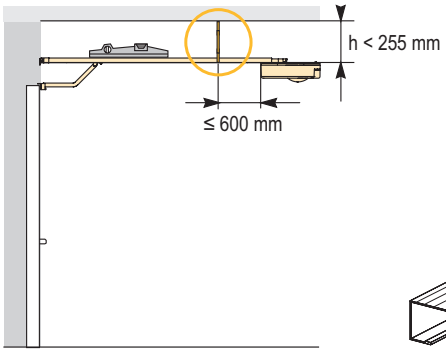

[1]

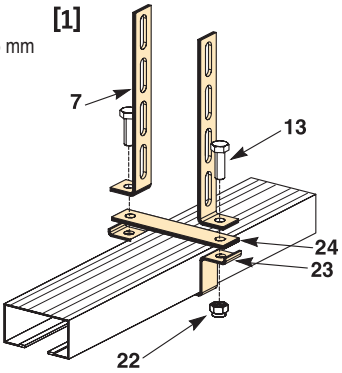

[2]

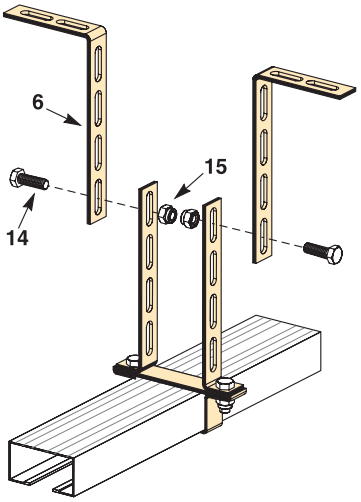

[3]

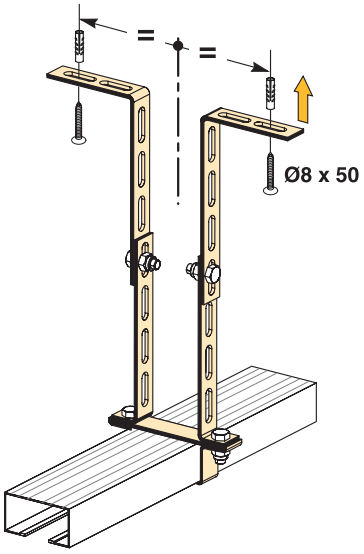

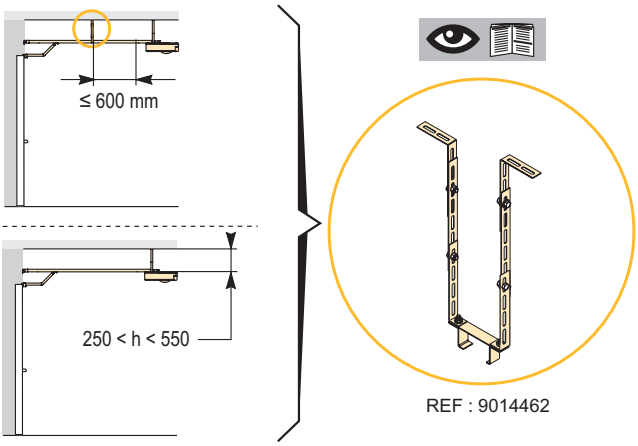

11

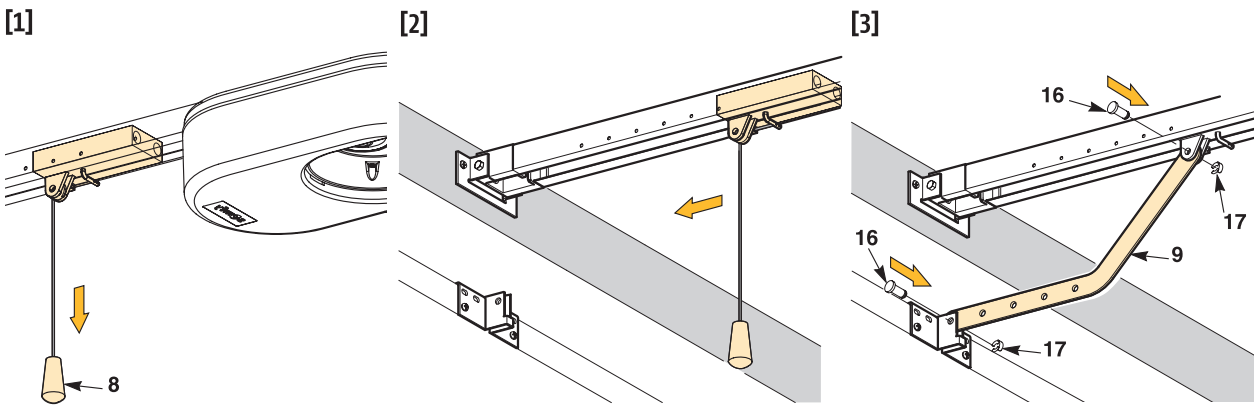

12

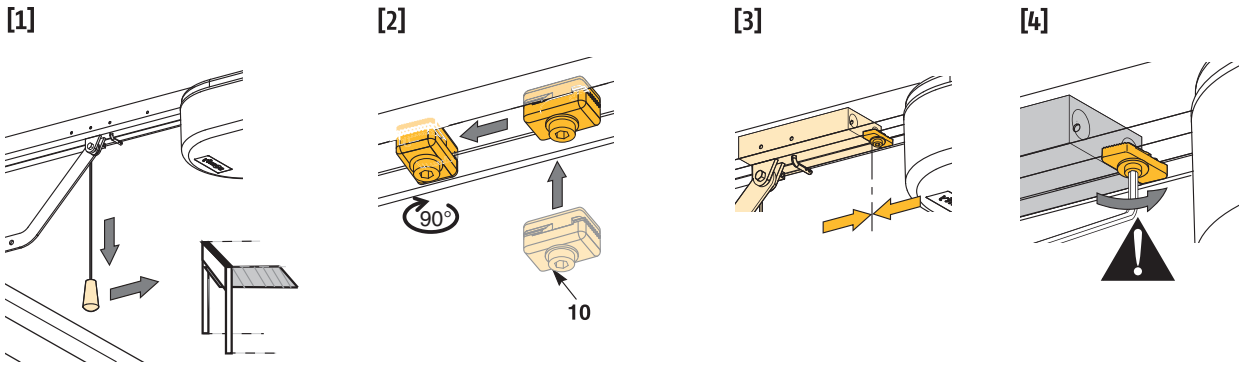

13

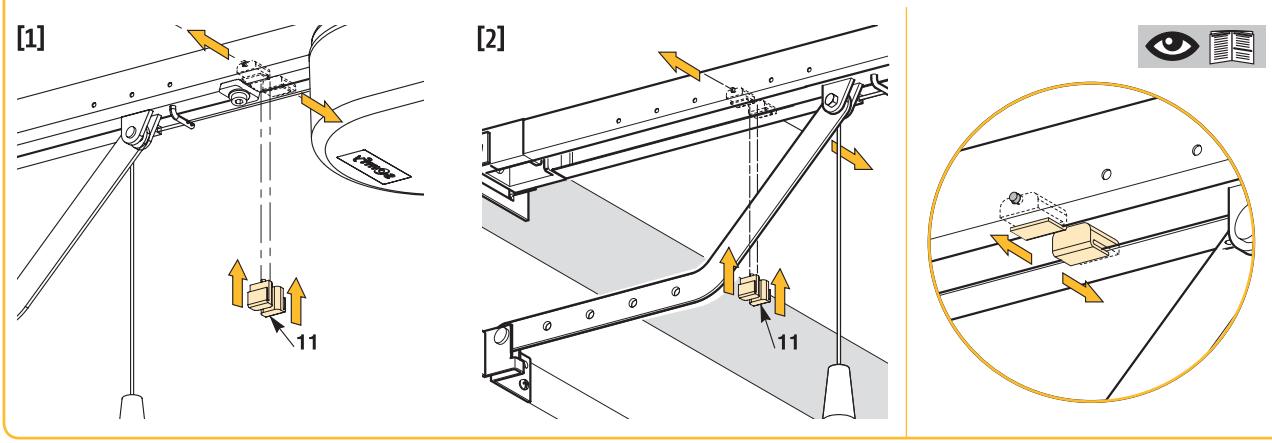

14

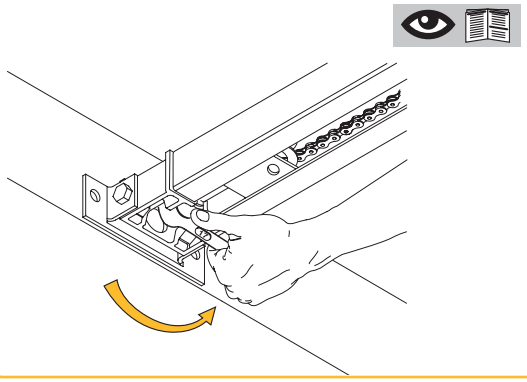

15

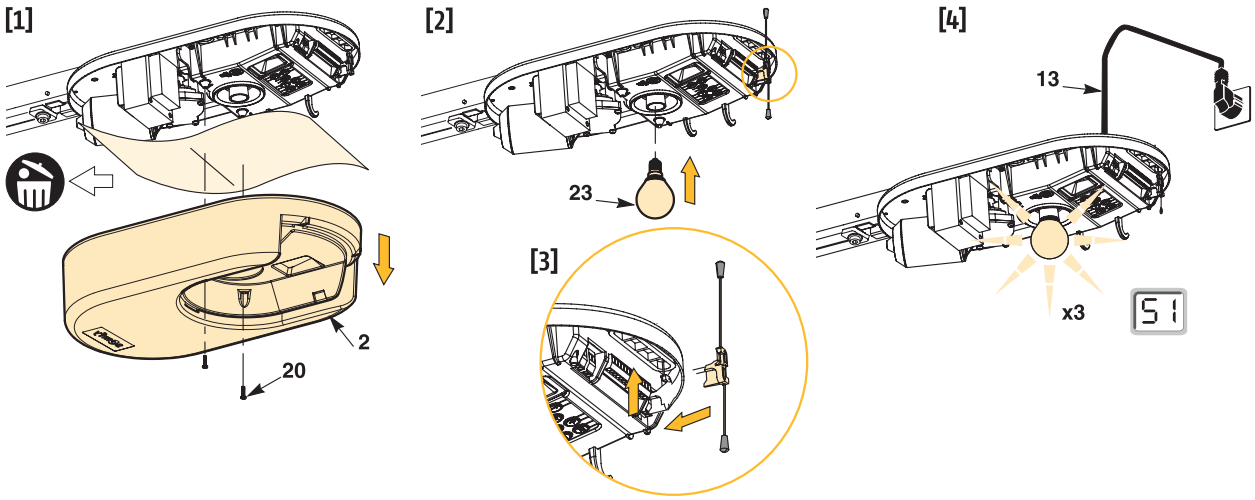

16

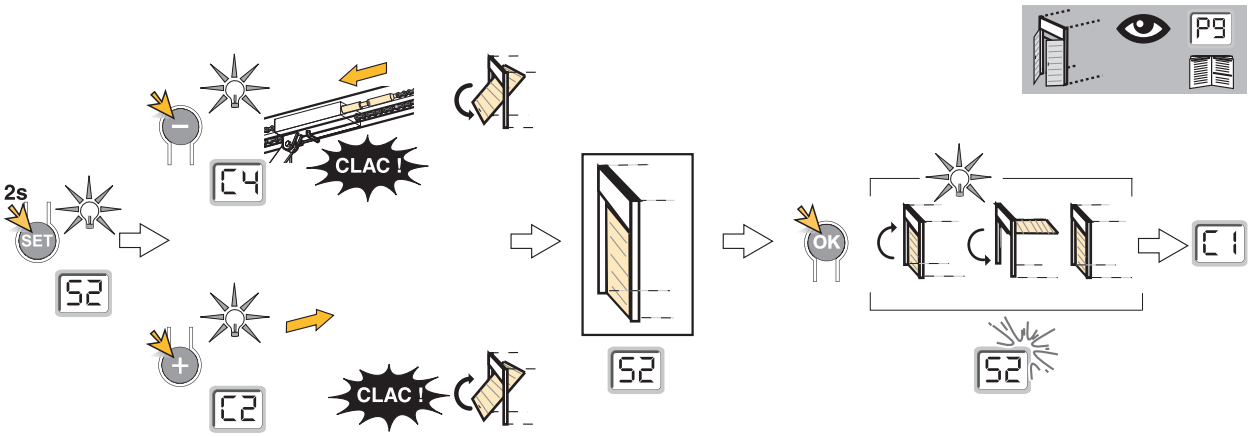
2s
SET
S2
C4
CLAC !
C2
CLAC !
S2
OK
C1
S2
P9

17

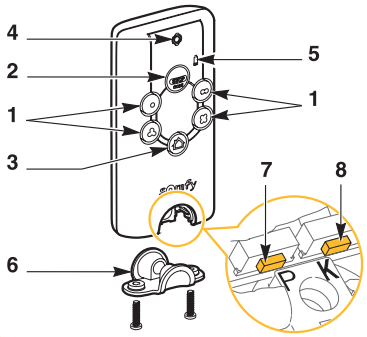
4
2
1
3
6
5
1
7
8
P
K

18

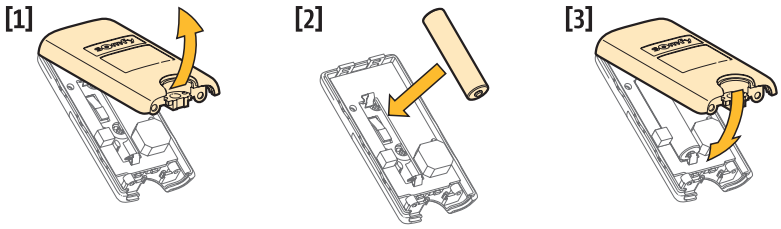
[1]
[2]
[3]

19

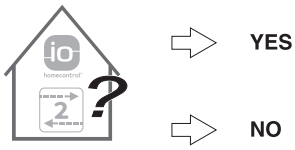
YES
NO

20

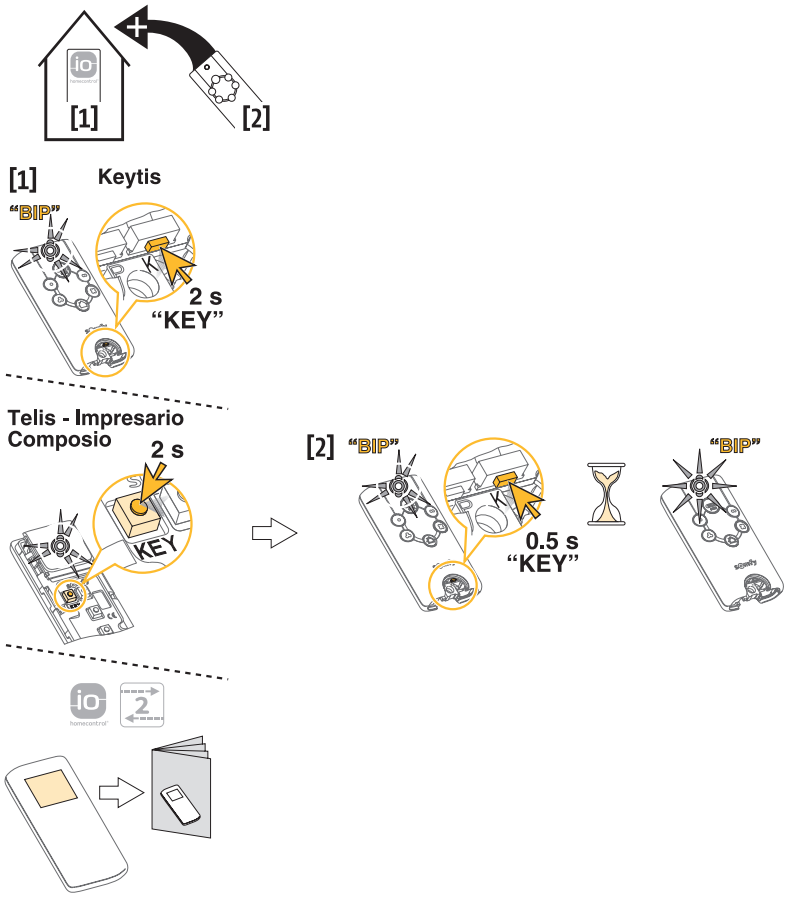
[1]
[2]
[1]
Keytis
"BIP"
2 s
"KEY"
Telis - Impresario
Composio
2 s
KEY
[2]
"BIP"
0.5 s
"KEY"
"BIP"

21

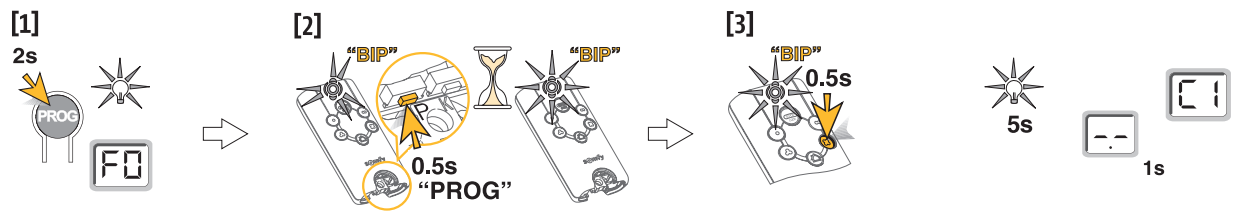

22

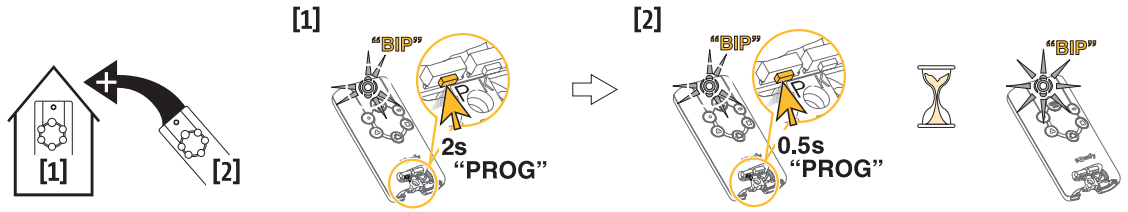

23

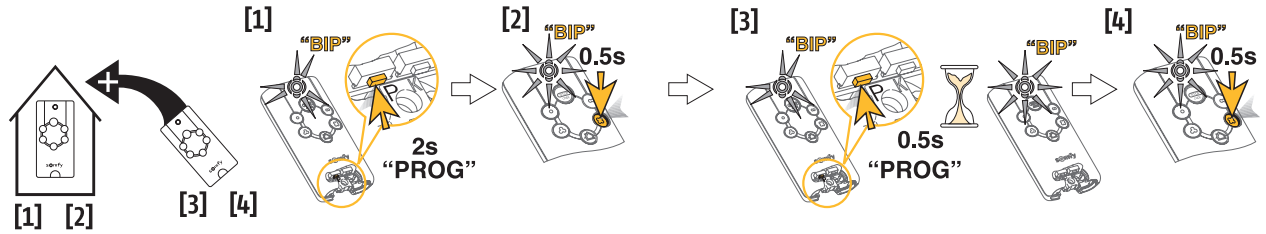

24

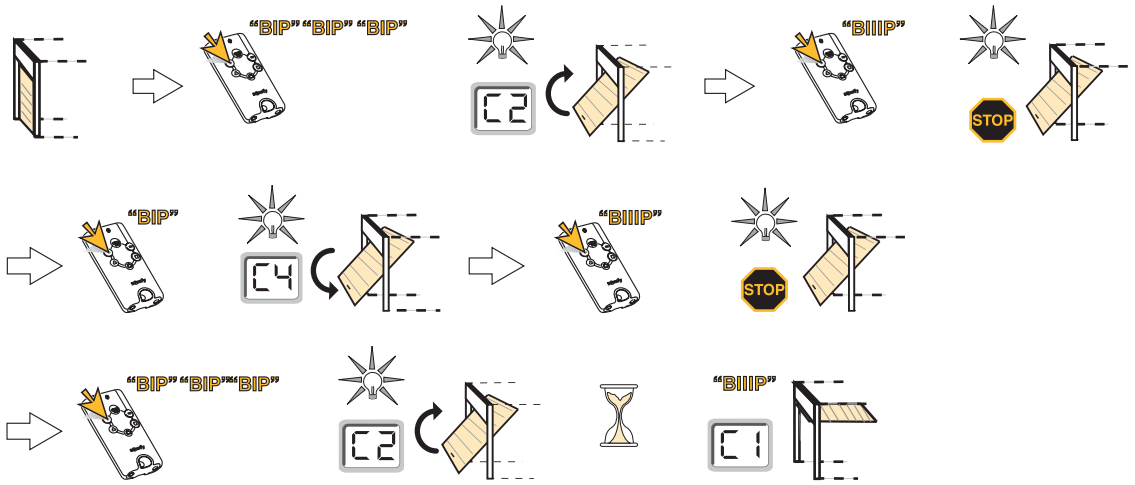

25

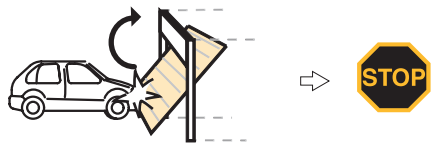

26

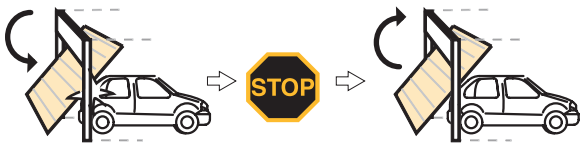

27

8 3 4 5 9 10 1 7 2 6

[1] [2] [3]

500W max.

230V ac | Lamp | 230V

5 6 7 8 9 10 11 12 13 14 15 16 17

Stop | Sec | Test Sec | 24V Cell | 24V dc | Flash | Start

18 19 20 21

Ant. | Batt.

28

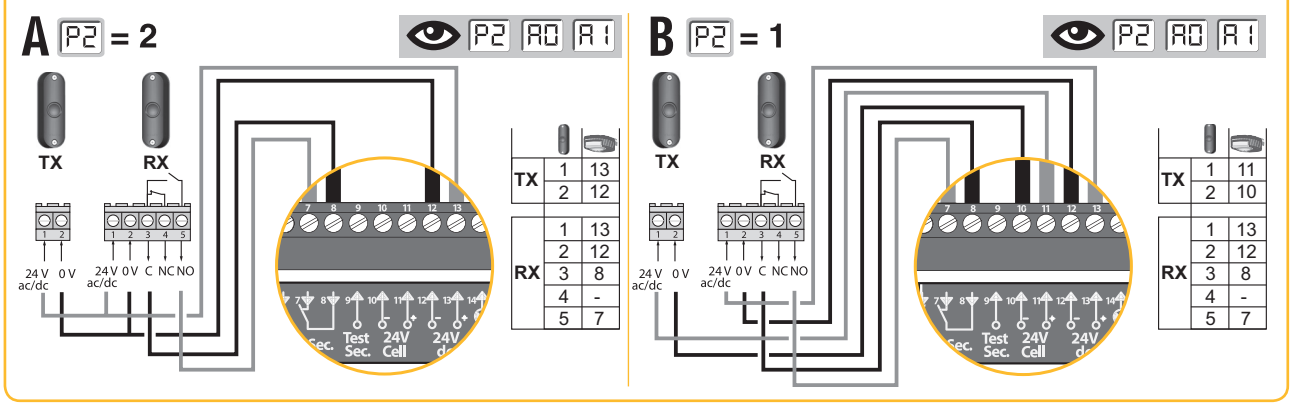

29

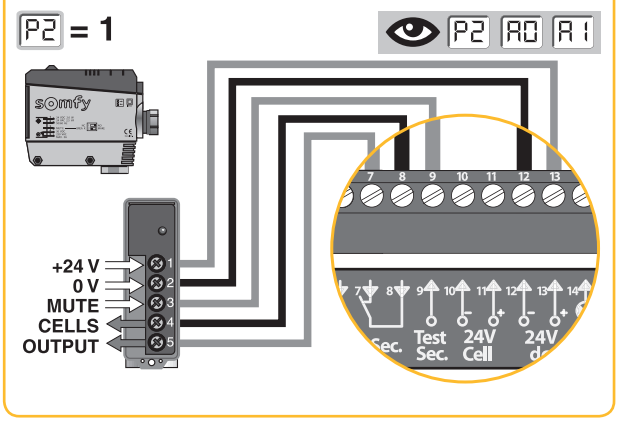

30

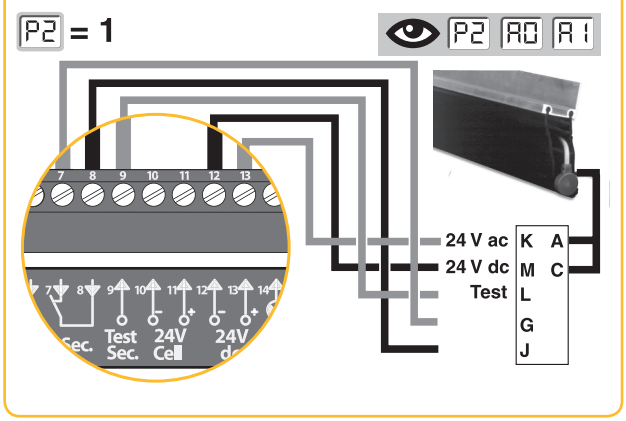

31

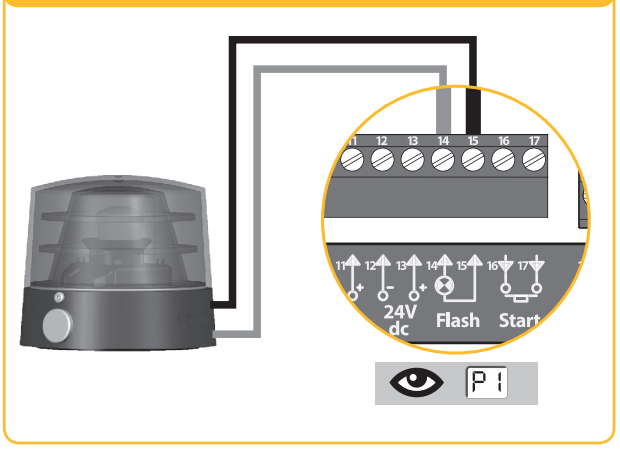

32

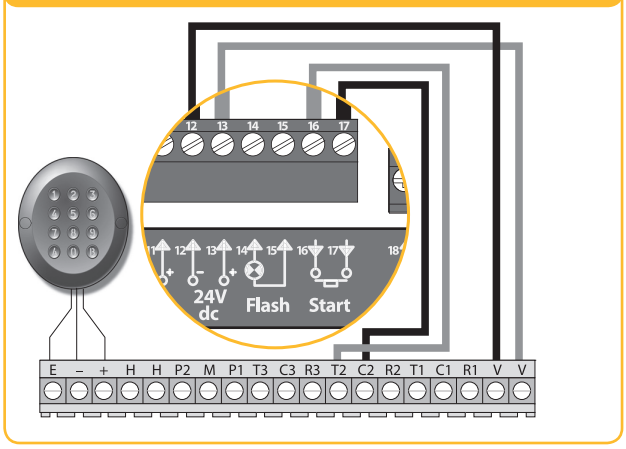

33

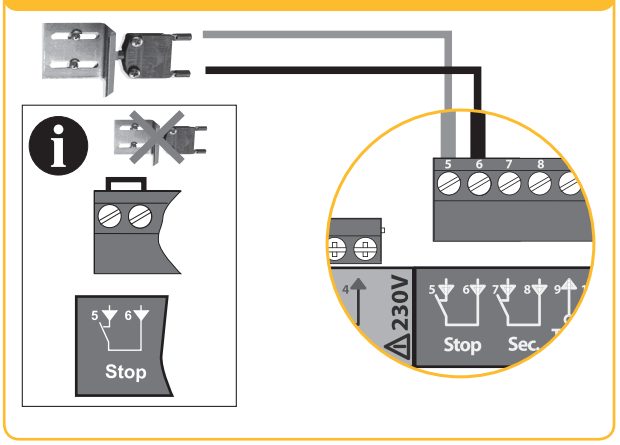

34

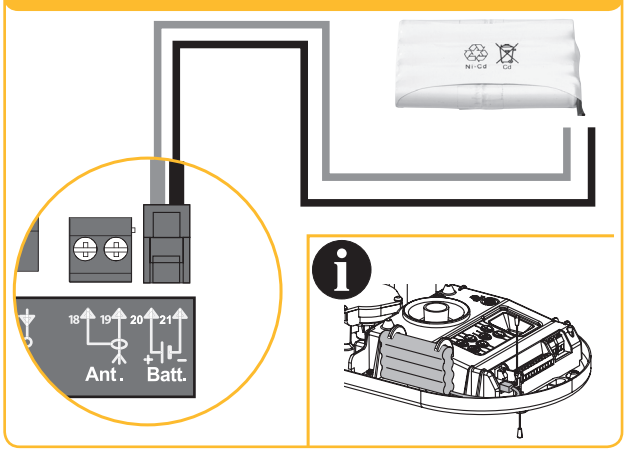

35

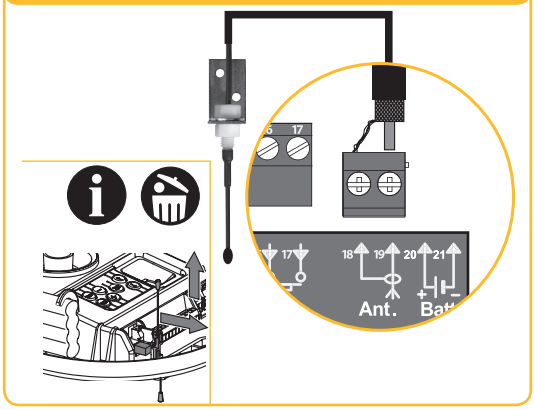

36

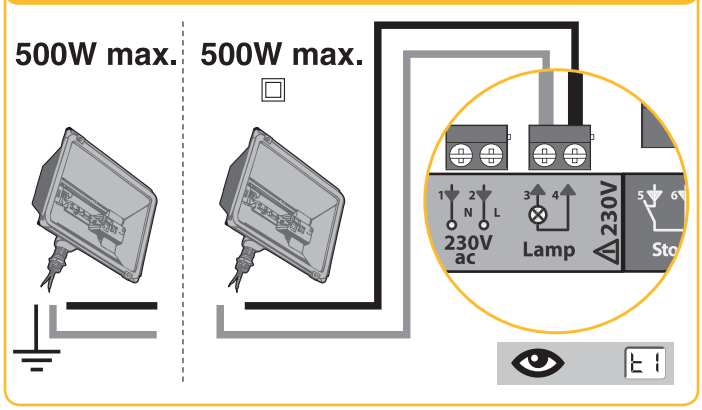

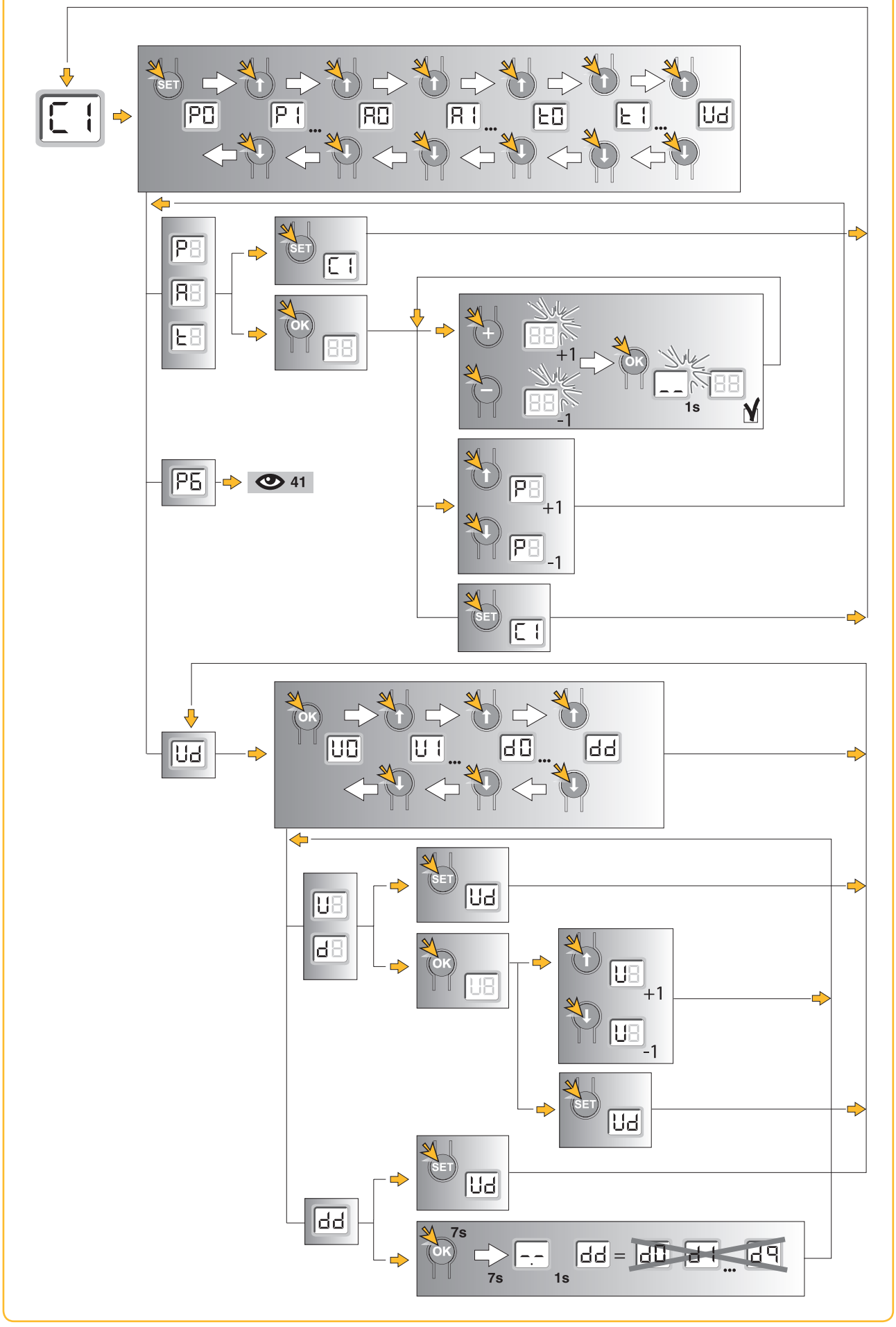
C1
SET
P0
P1
A0
A1
t0
t1
Ud
P8
A8
t8
OK
88
+1
-1
1s
P6
41
U0
U1
d0
dd
U8
d8
7s
dd =

38

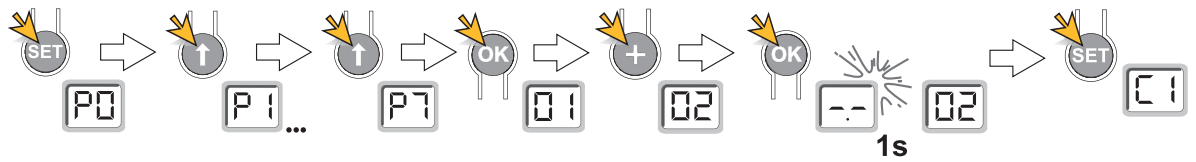

39

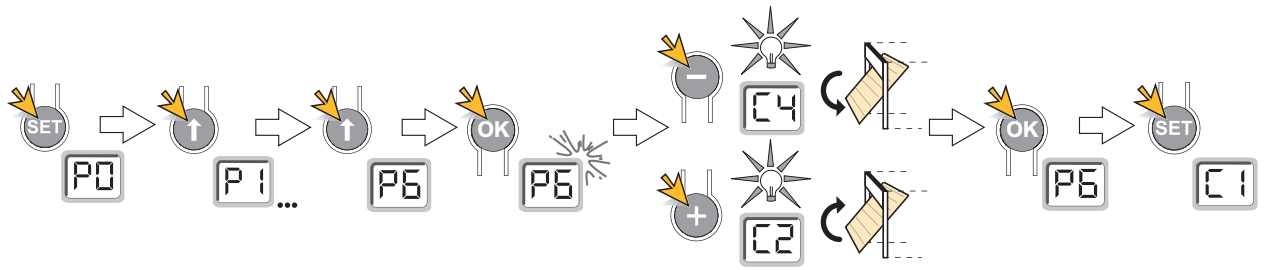

40

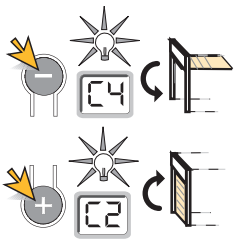

41

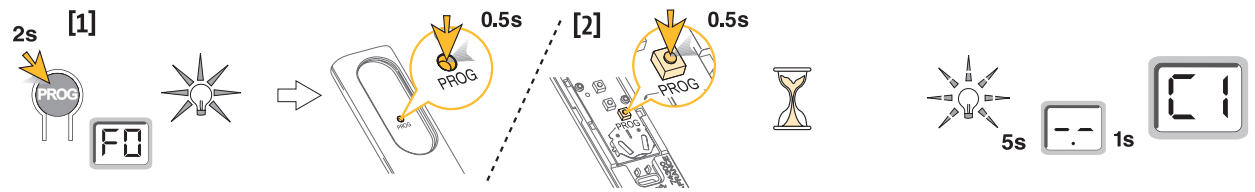

42

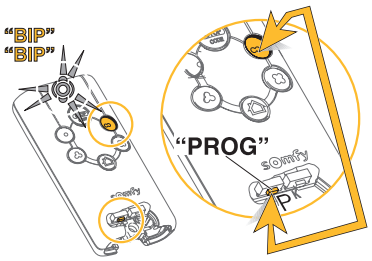

43

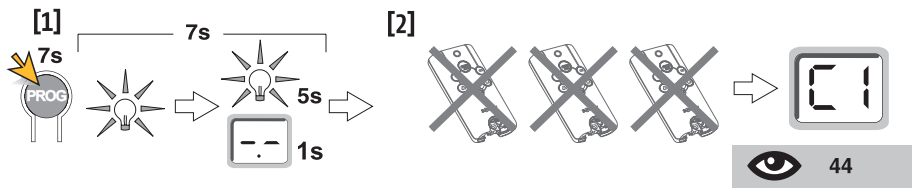

44

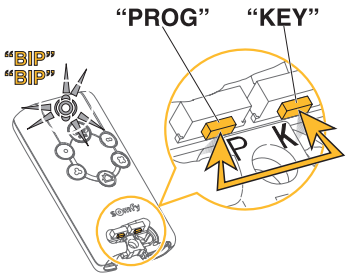

45

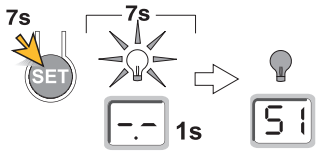

46

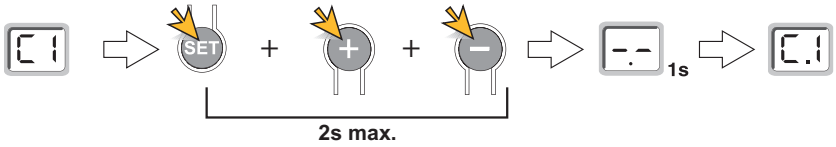

47

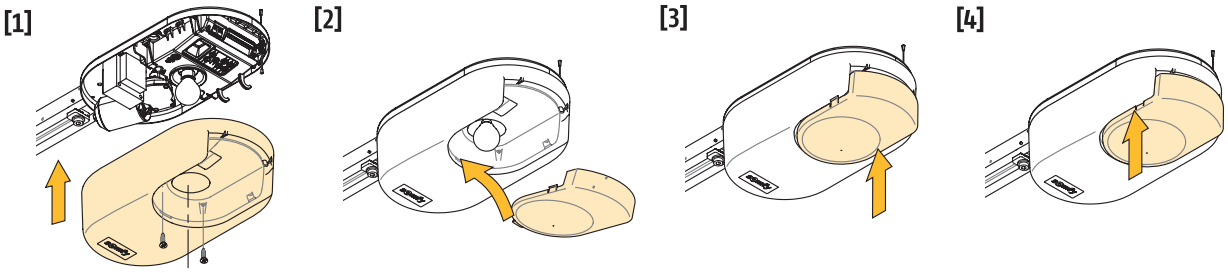

PATENTS AND DESIGN PATENTS PENDING FOR SOME COUNTRIES (e.g. : US)
Somfy SAS, capital 20.000.000 Euros, RCS Annecy 303.970.230 - 03/2010